BASIC SIZE	0~3	>3~6	>6~10	>10~18	>18~30	>30~50	>50~80	>80~120	>120~180	>180~250
DIMS TOLERANCE	±0.14	±0.18	±0.22	±0.27	±0.33	±0.39	±0.46	±0.54	±0.63	±0.72

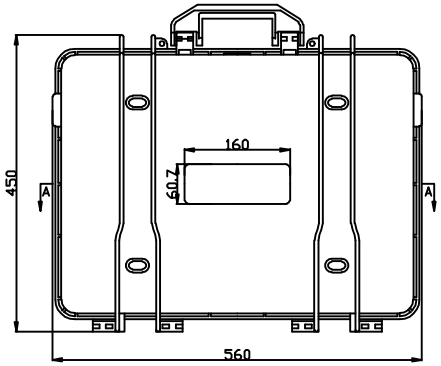

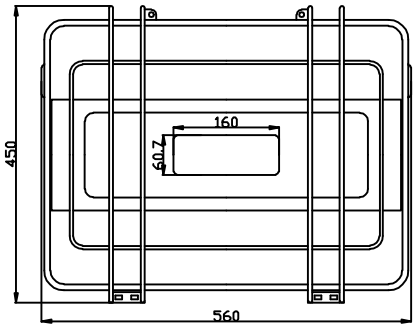

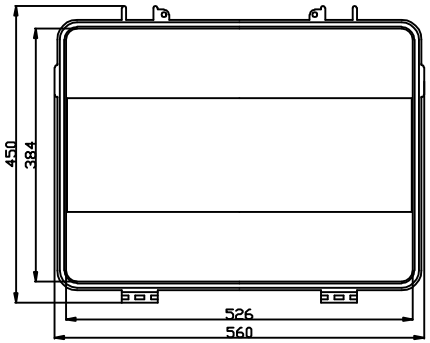

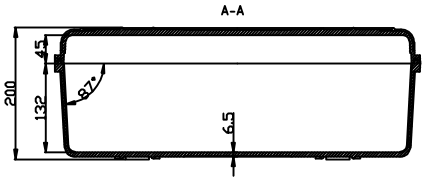

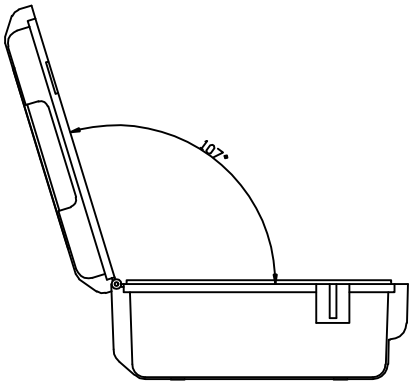

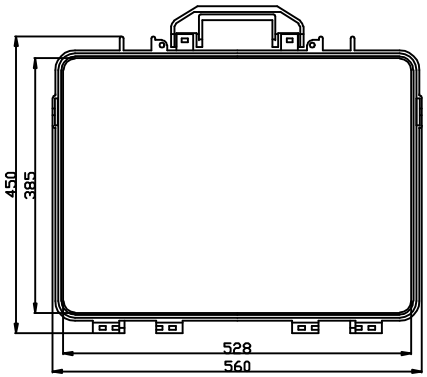

THE MACHINING TOLERANCES			NAME	DATE		DRX.EVEREST WWW.EVEREST CASE.COM	
UNSPECIFIED TOLERANCES FOLLOW GB/1804-1992 IT13		DRAWN					
		CHECKED				TITLE	EVEREST CASE
FOAM TOLERANCES	±3mm	ENG APPR				MATERIAL	ABS
THE ANGLE TOLERANCES	±1°	QT'Y : 1				/PART NO	EPC018
FIRST ANGLE PROJECTION		SCALE	1:1	UNIT	mm	DO NOT SCALE DRAWING	SHEET 1 OF 1